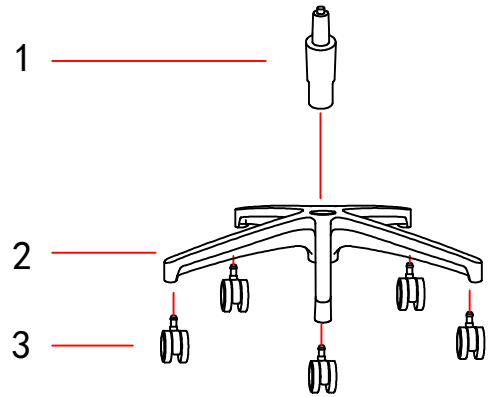

Step 1

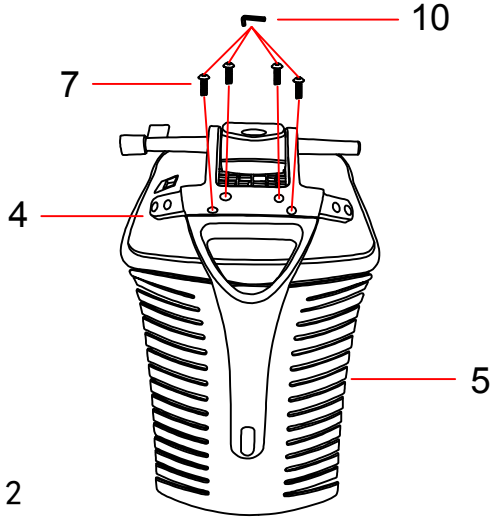

Step 2

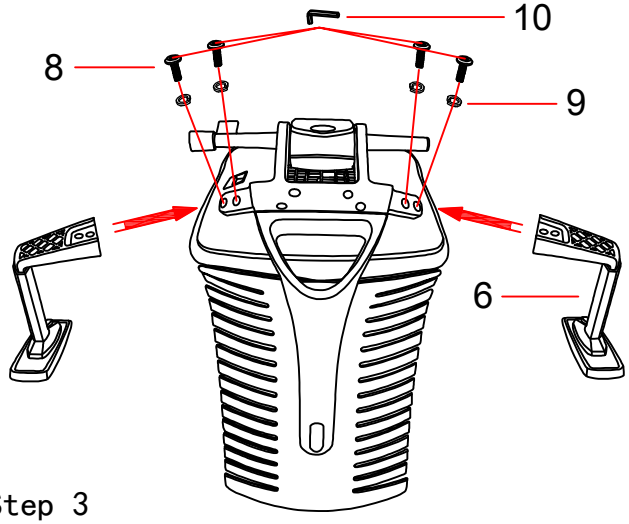

Step 3

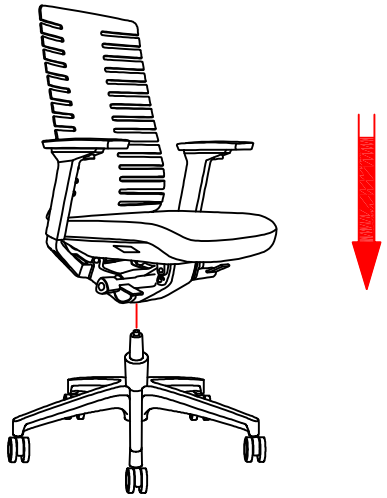

Step 4

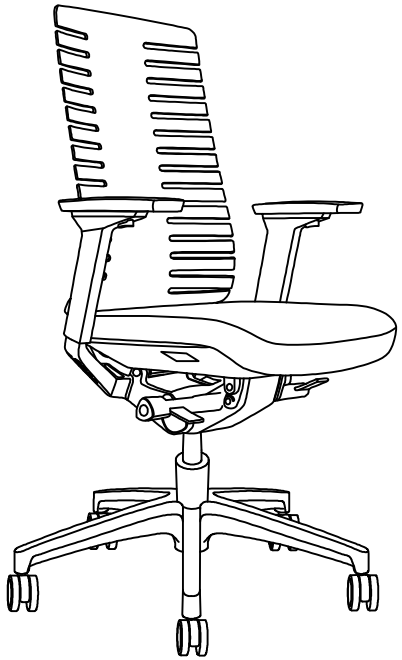

Step 5

6228B-HS	NO.	1	2	3	4	5	6	7	8	9	10	11	12	13	14	15	16	17	18
	SKETCH																		
	SIZE							M6X20MM	M8X20MM	M8X13MM	M5								
	QTY	1pcs	1pcs	5pcs	1pcs	1pcs	2pcs	4pcs	4pcs	4pcs	1pcs								